MAX14870 Single Brushed DC Motor Driver Carrier
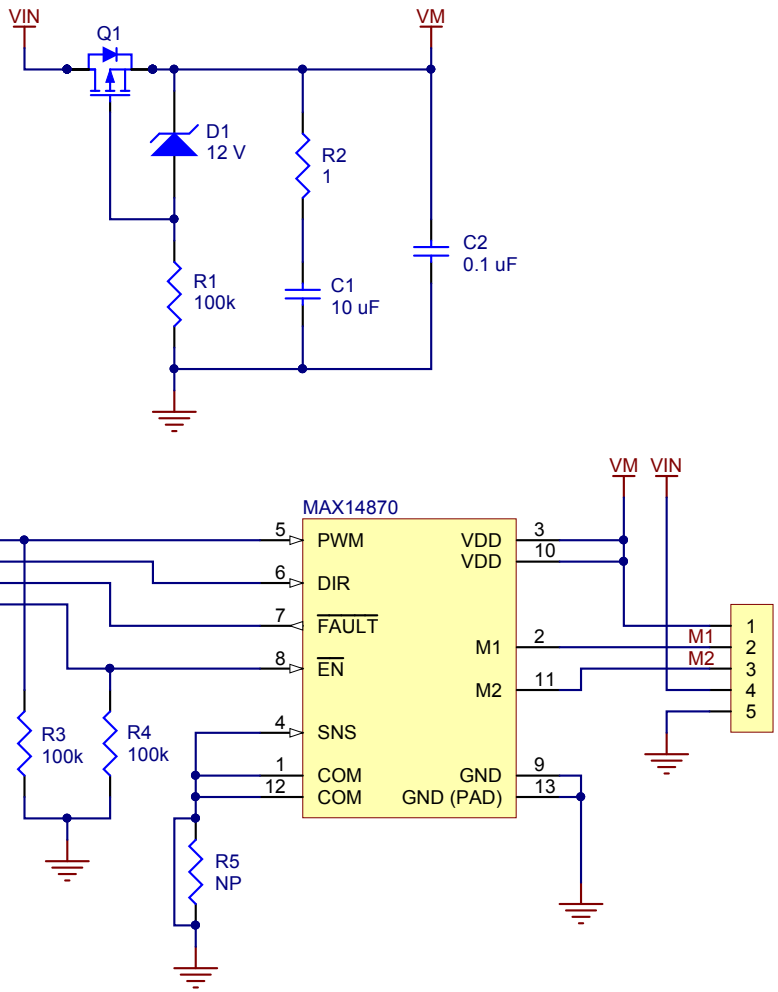
©2015 Pololu Corporation
www.pololu.com